Reg. No. [ ] [ ] [ ] [ ] [ ] [ ] [ ] [ ] [ ] [ ] [18EE51]

FIFTH SEMESTER B.Tech EXAMINATION, DECEMBER–2021

POWER SYSTEM - 1

Time: 3 Hours **Maximum Marks: 70**

Instructions:
i. Answer **FIVE** full Questions. Question number 1 and 2 are compulsory. Each question carries 14 marks.
ii. Missing data may be suitably assumed.

1. a. A DC 2-wire distribution system is converted into AC 3-phase, 3-wire system by adding a third conductor of the same size as the two existing conductors. If voltage between conductors and percentage power loss remain the same, calculate the percentage additional balanced load which can now be carried by the conductors at 0.95 p.f. **07**

b. Explain the working of nuclear power plant with neat sketch. **07**

2. a. Define string efficiency and list out the various method to increase the string efficiency? **07**

b. Evaluate the inductance of the double circuit line shown in Fig. 1. The self GMD of the conductor is 0.007 m. **07**

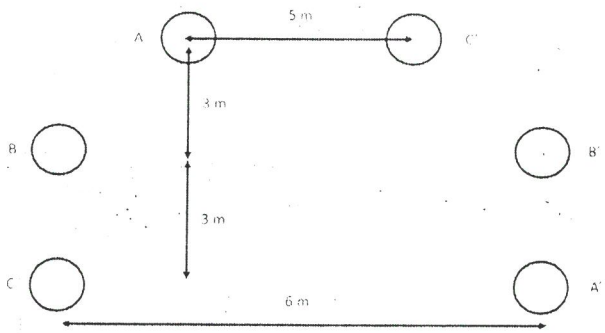

Fig. 1.

3. a. A three-phase line delivers 3 MW at a p.f of 0.8 lagging to a load. If the sending end voltage is 33 kV. Evaluate the (i) receiving end voltage (ii) line current (iii) transmission efficiency. When the resistance and reactance of each conductor is 5 Ω and 8 Ω respectively. **07**

b. Define sag and derive the necessary equations when the conductor takes the form of parabola, supported at equal of sag. Describe the effect of ice and wind on Sag? **07**

OR

4. a. The two towers of height 95 m and 70 m respectively support the line conductor, at a river crossing. The horizontal distance between the towers is 400 m. If the tension in the conductor is 1100 kg and its weight is 0.8 kg/m, **07**

calculate

i. sag at lower support

ii. sag at upper support and

iii. clearance of lowest point on trajectory from water level. Assume bases of the towers to be at the water level.

b. With necessary illustrations derive an expression for sending end voltage and current for long transmission line using rigorous solution. **07**

5. a. Define the cable grading? Explain its necessity and methods of cable grading? **07**

b. Derive an expression for an insulation resistance and capacitance of a single core cable. **07**

OR

6. a. Discuss the advantages and disadvantages of radial system? **07**

b. A DC two-wire distributor F1 and F2 is fed at both the ends at the same voltage of 220 V. The length of the distributor is 250 m and the loads tapped off from the end F1 are: **07**

Distance in meter:	50	75	100	150
Loads in Amps:	10	40	30	25

Resistance per km of both distributor is 0.2 Ω. Find the current in each section and voltage at each load point.

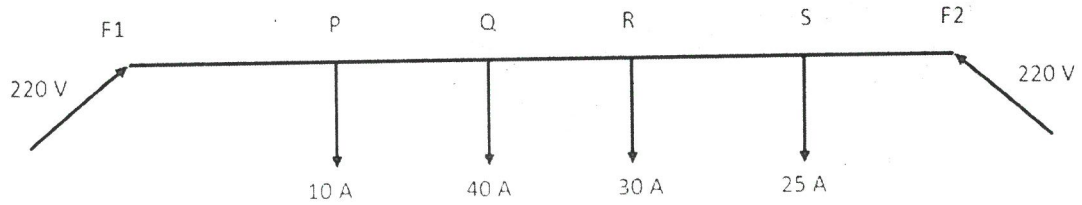

7. a. With an appropriate definition define fuse and explain the desirable characteristics of fuse element? Mention its advantages and disadvantages. **07**

b. Explain the operating principle of circuit breaker and discuss the arc phenomenon in a circuit breaker. **07**

OR

8. a. Explain the construction and working of Buchholz relay. Discuss its advantages and disadvantages. **07**

b. Illustrate with a neat diagram the arrangement, working and advantages of Merz-Price circulating current principle for the protection of alternator. **07**